LATERAL PADS WITH CANE MOUNT

Attaching Rigid Lateral Pads with Cane Mount
and Swing Away Lateral Pads with Cane Mount

COMFORT COMPANY

Toll Free 800.564.9248 www.comfortcompany.com 509 South 22nd Ave Bozeman, MT 59718

IS-LATERALPADCANE
REV0513

RIGID LATERAL PADS WITH CANE MOUNT

Parts Included:

1 - Rigid Lateral Hardware Assembly with Cane Mount (LT_-RC)
1 - 5mm Allen Wrench
1 - 5/32" Allen Wrench

1. Loosen bolts (A) using the provided 5mm Allen wrench.
2. Mount the cane clamp assembly on to the wheel chair cane in the order (A-B-C-D-CANE-E) as shown in Figure 1. Securely tighten once the cane clamp is in position.
3. To properly position the lateral pad (F), loosen but do not remove bolts (G or H) and slide them along the slots of brackets (I or J) using the provided 5mm and 5/32" Allen wrench. Securely tighten once mounting brackets are in position.
4. To adjust the orientation of the mounting brackets (I or J), loosen but do not remove bolts (K) using the provided 5mm Allen Wrench. Securely tighten once mounting brackets are in position.

Figure 1: Right Side Rigid Lateral Pad with Cane Clamp

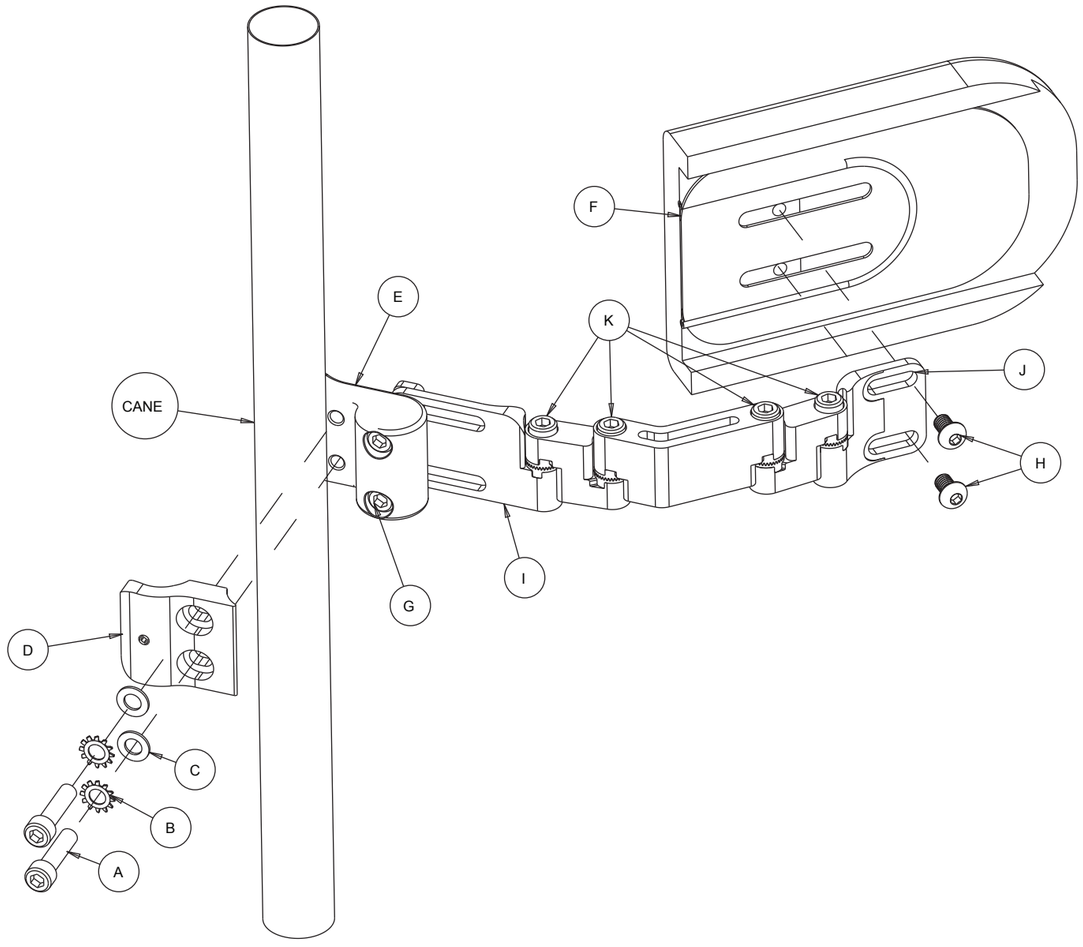

SWING AWAY LATERAL PADS WITH CANE MOUNT

Parts Included:

1 - Swing Away Lateral Hardware Assembly with Cane Mount (LT_-SC)
1 - 5mm Allen Wrench
1 - 5/32" Allen Wrench

1. Loosen bolts (A) using the provided 5mm Allen wrench.
2. Mount the cane clamp assembly on to the wheel chair cane in the order (A-B-C-D-CANE-E) as shown in Figure 2. Securely tighten once the cane clamp is in position.
3. To properly position the lateral pad (F), loosen but do not remove bolts (G or H) and slide them along the slots of brackets (I or J) using the provided 5mm and 5/32" Allen wrench. Securely tighten once mounting brackets are in position.
4. To adjust the orientation of the mounting brackets (I or J), loosen but do not remove bolts (K) using the provided 5mm Allen Wrench. Securely tighten once mounting brackets are in position.
5. To swing away the lateral pad, press swing away lever (L). Assembly will snap back into place when returned to its original position.
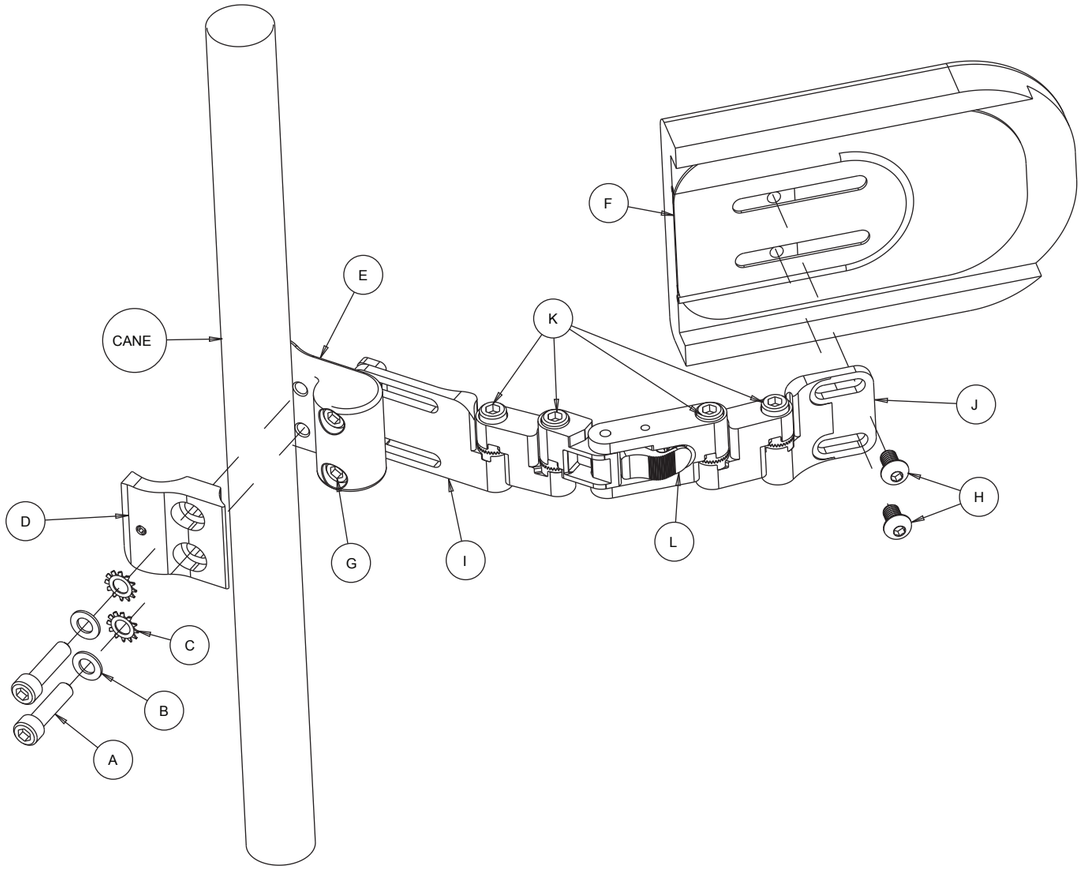
Figure 2: Right Side Swing Away Lateral Pad with Cane Clamp